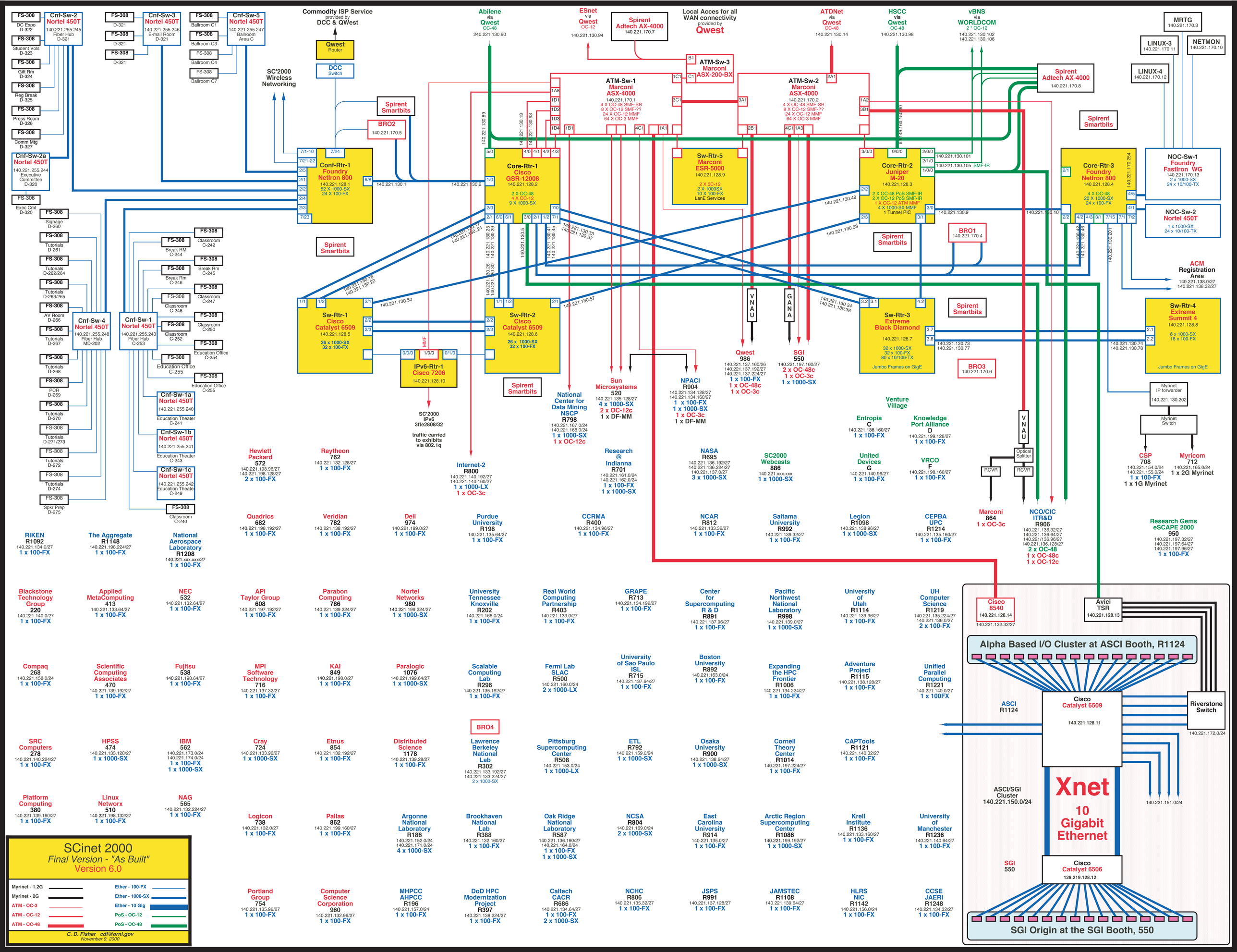
SCinet 2000
Final Version - "As Built"
Version 6.0
Myrinet - 1.2G
Myrinet - 2G
ATM - OC-3
ATM - OC-12
ATM - OC-48
Ether - 100-FX
Ether - 1000-SX
Ether - 10 Gig
PoS - OC-12
PoS - OC-48
C. D. Fisher cdf@ornl.gov
November 9, 2000
Cnf-Sw-2 Nortel 450T 140.221.255.245 Fiber Hub D-321
Cnf-Sw-3 Nortel 450T 140.221.255.246 E-mail Room D-321
Cnf-Sw-5 Nortel 450T 140.221.255.247 Ballroom Area C
Cnf-Sw-2a Nortel 450T 140.221.255.244 Executive Committee D-320
Cnf-Sw-4 Nortel 450T 140.221.255.248 Fiber Hub MD-202
Cnf-Sw-1 Nortel 450T 140.221.255.243 Fiber Hub C-253
Cnf-Sw-1a Nortel 450T 140.221.255.240 Education Theater C-241
Cnf-Sw-1b Nortel 450T 140.221.255.241 Education Theater C-243
Cnf-Sw-1c Nortel 450T 140.221.255.242 Education Theater C-249
Commodity ISP Service provided by DCC & QWest
Qwest Router
DCC Switch
SC'2000 Wireless Networking
Spirent Smartbits
BRO2 140.221.170.5
Conf-Rtr-1 Foundry NetIron 800 140.221.128.1 52 X 1000-SX 24 X 100-FX
Core-Rtr-1 Cisco GSR-12008 140.221.128.2 2 X OC-48 4 X OC-12 9 X 1000-SX
Sw-Rtr-1 Cisco Catalyst 6509 140.221.128.5 26 x 1000-SX 32 x 100-FX
Sw-Rtr-2 Cisco Catalyst 6509 140.221.128.6 26 x 1000-SX 32 x 100-FX
IPv6-Rtr-1 Cisco 7206 140.221.128.10
SC'2000 IPv6 3ffe2808/32 traffic carried to exhibits via 802.1q
Abilene via Qwest OC-48 240.221.130.90
ESnet via Qwest OC-12 140.221.130.94
Spirent Adtech AX-4000 140.221.170.7
Local Acces for all WAN connectivity provided by Qwest
ATDNet via Qwest OC-48 140.221.130.14
HSCC via Qwest OC-48 140.221.130.98
vBNS via WORLDCOM 2 * OC-12 140.221.130.102 140.221.130.106
ATM-Sw-3 Marconi ASX-200-BX
ATM-Sw-1 Marconi ASX-4000 140.221.170.1 4 X OC-48 SMF-SR 8 X OC-12 SMF-?? 24 X OC-12 MMF 64 X OC-3 MMF
ATM-Sw-2 Marconi ASX-4000 140.221.170.2 4 X OC-48 SMF-SR 8 X OC-12 SMF-?? 24 X OC-12 MMF 64 X OC-3 MMF
Sw-Rtr-5 Marconi ESR-5000 140.221.128.9 2 X OC-12 2 X 1000SX 10 X 100-FX LanE Services
Core-Rtr-2 Juniper M-20 140.221.128.3 2 X OC-48 PoS SMF-IR 2 X OC-12 PoS SMF-IR 1 X OC-12 ATM MMF 4 X 1000-SX MMF 1 Tunnel PIC
Core-Rtr-3 Foundry NetIron 800 140.221.128.4 4 X OC-48 20 X 1000-SX 24 x 100-FX
Spirent Adtech AX-4000 140.221.170.8
MRTG 140.221.170.3
LINUX-3 140.221.170.11
NETMON 140.221.170.10
LINUX-4 140.221.170.12
NOC-Sw-1 Foundry FastIron WG 140.221.170.13 2 x 1000-SX 24 x 10/100-TX
NOC-Sw-2 Nortel 450T 1 x 1000-SX 24 x 10/100-TX
BRO1 140.221.170.4
BRO3 140.221.170.6
ACM Registration Area 140.221.138.0/27 140.221.138.32/27
Sw-Rtr-3 Extreme Black Diamond 140.221.128.7 32 x 1000-SX 32 x 100-FX 80 x 10/100-TX Jumbo Frames on GigE
Sw-Rtr-4 Extreme Summit 4 140.221.128.8 6 x 1000-SX 16 x 100-FX Jumbo Frames on GigE
Myrinet IP forwarder 140.221.130.202
Myrinet Switch
CSP 708 140.221.154.0/24 140.221.155.0/24 1 x 100-FX 1 x 1G Myrinet
Myricom 712 140.221.165.0/24 1 x 2G Myrinet
Optical Splitter
RCVR
VNAU
GANA
Qwest 986 140.221.137.160/26 140.221.137.192/27 140.221.137.224/27 1 x 100-FX 1 x OC-48c 1 x OC-3c
SGI 550 140.221.197.160/27 2 x OC-48c 1 x OC-3c 1 x 1000-SX
Sun Microsystems 520 140.221.135.128/27 4 x 1000-SX 2 x OC-12c 1 x DF-MM
NPACI R904 140.221.134.128/27 140.221.134.160/27 1 x 100-FX 1 x 1000-SX 1 x OC-3c 1 x DF-MM
National Center for Data Mining NSCP R798 140.221.167.0/24 140.221.168.0/24 1 x 1000-SX 1 x OC-12c
Internet-2 R800 140.221.140.192/27 140.221.140.160/27 1 x 1000-LX 1 x OC-3c
Research @ Indianna R701 140.221.161.0/24 140.221.162.0/24 1 x 100-FX 1 x 1000-SX
NASA R695 140.221.136.192/27 140.221.136.224/27 140.221.137.0/27 3 x 1000-SX
SC2000 Webcasts 886 140.221.xxx.xxx 1 x 1000-SX
Venture Village
Entropia C 140.221.138.160/27 1 x 100-FX
Knowledge Port Alliance D 140.221.199.128/27 1 x 100-FX
United Devices G 140.221.140.96/27 1 x 100-FX
VRCO F 140.221.198.160/27 1 x 100-FX
Marconi 864 1 x OC-3c
NCO/CIC ITR&D R906 140.221.136.32/27 140.221.136.64/27 140.221.136.96/27 140.221.136.128/27 2 x OC-48 1 x OC-48c 1 x OC-12c
Research Gems eSCAPE 2000 950 140.221.197.32/27 140.221.197.64/27 140.221.197.96/27 1 x 100-FX
Cisco 8540 140.221.128.14 140.221.132.32/27
Avici TSR 140.221.128.13
Alpha Based I/O Cluster at ASCI Booth, R1124
ASCI R1124
Cisco Catalyst 6509 140.221.128.11
Riverstone Switch 140.221.172.0/24
140.221.151.0/24
ASCI/SGI Cluster 140.221.150.0/24
Xnet 10 Gigabit Ethernet
SGI 550
Cisco Catalyst 6506 128.219.128.12
SGI Origin at the SGI Booth, 550
RIKEN R1092 140.221.134.0/27 1 x 100-FX
The Aggregate R1148 140.221.198.224/27 1 x 100-FX
National Aerospace Laboratory R1208 140.221.xxx.xxx/27 1 x 100-FX
Hewlett Packard 572 140.221.198.96/27 140.221.198.128/27 2 x 100-FX
Raytheon 762 140.221.132.128/27 1 x 100-FX
Quadrics 682 140.221.198.192/27 1 x 100-FX
Veridian 782 140.221.138.192/27 1 x 100-FX
Dell 974 140.221.199.0/27 1 x 100-FX
Purdue University R198 140.221.135.64/27 1 x 100-FX
CCRMA R400 140.221.134.96/27 1 x 100-FX
NCAR R812 140.221.133.32/27 1 x 100-FX
Saitama University R992 140.221.139.32/27 1 x 100-FX
Legion R1098 140.221.138.96/27 1 x 1000-SX
CEPBA UPC R1214 140.221.135.160/27 1 x 100-FX
Blackstone Technology Group 220 140.221.140.0/27 1 x 100-FX
Applied MetaComputing 413 140.221.133.64/27 1 x 100-FX
NEC 532 140.221.132.64/27 1 x 100-FX
API Taylor Group 608 140.221.197.192/27 1 x 100-FX
Parabon Computing 786 140.221.139.224/27 1 x 100-FX
Nortel Networks 980 140.221.199.224/27 1 x 1000-SX
University Tennessee Knoxville R202 140.221.166.0/24 1 x 100-FX
Real World Computing Partnership R403 140.221.133.0/27 1 x 100-FX
GRAPE R713 140.221.134.192/27 1 x 100-FX
Center for Supercomputing R & D R891 140.221.137.96/27 1 x 100-FX
Pacific Northwest National Laboratory R998 140.221.139.0/27 1 x 1000-SX
University of Utah R1114 140.221.139.96/27 1 x 100-FX
UH Computer Science R1219 140.221.135.224/27 140.221.136.0/27 2 x 100-FX
Compaq 268 140.221.158.0/24 1 x 100-FX
Scientific Computing Associates 470 140.221.139.192/27 1 x 100-FX
Fujitsu 538 140.221.198.64/27 1 x 100-FX
MPI Software Technology 716 140.221.137.32/27 1 x 100-FX
KAI 849 140.221.198.0/27 1 x 100-FX
Paralogic 1076 140.221.199.64/27 1 x 1000-SX
Scalable Computing Lab R296 140.221.135.192/27 1 x 100-FX
Fermi Lab SLAC R500 140.221.160.0/24 2 x 1000-LX
University of Sao Paulo ISL R715 140.221.137.64/27 1 x 100-FX
Boston University R892 140.221.163.0/24 1 x 100-FX
Expanding the HPC Frontier R1006 140.221.134.224/27 1 x 100-FX
Adventure Project R1115 140.221.138.128/27 1 x 100-FX
Unified Parallel Computing R1221 140.221.140.0/27 1 x 100FX
SRC Computers 278 140.221.140.224/27 1 x 100-FX
HPSS 474 140.221.133.128/27 1 x 1000-SX
IBM 562 140.221.173.0/24 140.221.174.0/24 1 x 100-FX 1 x 1000-SX
Cray 724 140.221.133.96/27 1 x 1000-SX
Etnus 854 140.221.132.192/27 1 x 100-FX
Distributed Science 1178 140.221.139.28/27 1 x 100-FX
BRO4
Lawrence Berkeley National Lab R302 140.221.133.192/27 140.221.133.224/27 2 x 1000-SX
Pittsburg Supercomputing Center R508 140.221.153.0/24 1 x 1000-LX
ETL R792 140.221.159.0/24 1 x 1000-SX
Osaka University R900 140.221.138.64/27 1 x 1000-SX
Cornell Theory Center R1014 140.221.197.224/27 1 x 100-FX
CAPTools R1121 140.221.140.32/27 1 x 100-FX
Platform Computing 380 140.221.139.160/27 1 x 100-FX
Linux Networx 510 140.221.198.132/27 1 x 100-FX
NAG 565 140.221.132.224/27 1 x 100-FX
Logicon 738 140.221.132.0/27 1 x 100-FX
Pallas 862 140.221.199.160/27 1 x 100-FX
Argonne National Laboratory R186 140.221.152.0/24 140.221.171.0/24 4 x 1000-SX
Brookhaven National Lab R388 140.221.132.160/27 1 x 100-FX
Oak Ridge National Laboratory R587 140.221.136.160/27 140.221.164.0/24 1 x 100-FX 1 x 1000-SX
NCSA R804 140.221.169.0/24 2 x 1000-SX
East Carolina University R914 140.221.135.0/27 1 x 100-FX
Arctic Region Supercomputing Center R1086 140.221.199.192/27 1 x 1000-SX
Krell Institute R1136 140.221.133.160/27 1 x 100-FX
University of Manchester R1236 140.221.140.64/27 1 x 100-FX
Portland Group 754 140.221.135.96/27 1 x 100-FX
Computer Science Corporation 960 140.221.132.96/27 1 x 100-FX
MHPCC AHPCC R196 140.221.157.0/24 1 x 100-FX
DoD HPC Modernization Project R397 140.221.138.224/27 1 x 100-FX
Caltech CACR R686 140.221.134.64/27 1 x 100-FX 2 x 1000-SX
NCHC R806 140.221.135.32/27 1 x 100-FX
JSPS R991 140.221.137.128/27 1 x 100-FX
JAMSTEC R1108 140.221.139.64/27 1 x 100-FX
HLRS NIC R1142 140.221.156.0/24 1 x 100-FX
CCSE JAERI R1248 140.221.134.32/27 1 x 100-FX